NOT TO BE DISTRIBUTED OR COPIED WITHOUT PRIOR CONCENT OF PACIFIC BULLETPROOF

NOTES

NUMBER OF DOORS:	1
DOOR TYPE:	WOOD CORE
DOOR HARDWARE:	SCHLAGE
NUMBER OF DEAL TRAYS:	1
DEAL TRAY TYPE:	DROP-IN
NUMBER OF PAC. REC.	0
COLOR OF CHANNEL	GREY
TYPE OF CHANNEL:	SNAP
FIBERGLASS:	YES
ACRYLIC	YES
COATED/ UNCOATED	UNCOATED
LEVEL:	1
INSTALL DATE:	08/16/06

NOTES:

9.) 6" SPEAK HOLE WITH 10" ACRYLIC BACKER.
10.) 14" DEEP X 2" HIGH PLASTIC LAMINATE COUNTER TOP WITH 16"X10"X1 1/2" RECESSED DEAL TRAY.

TOP VIEW

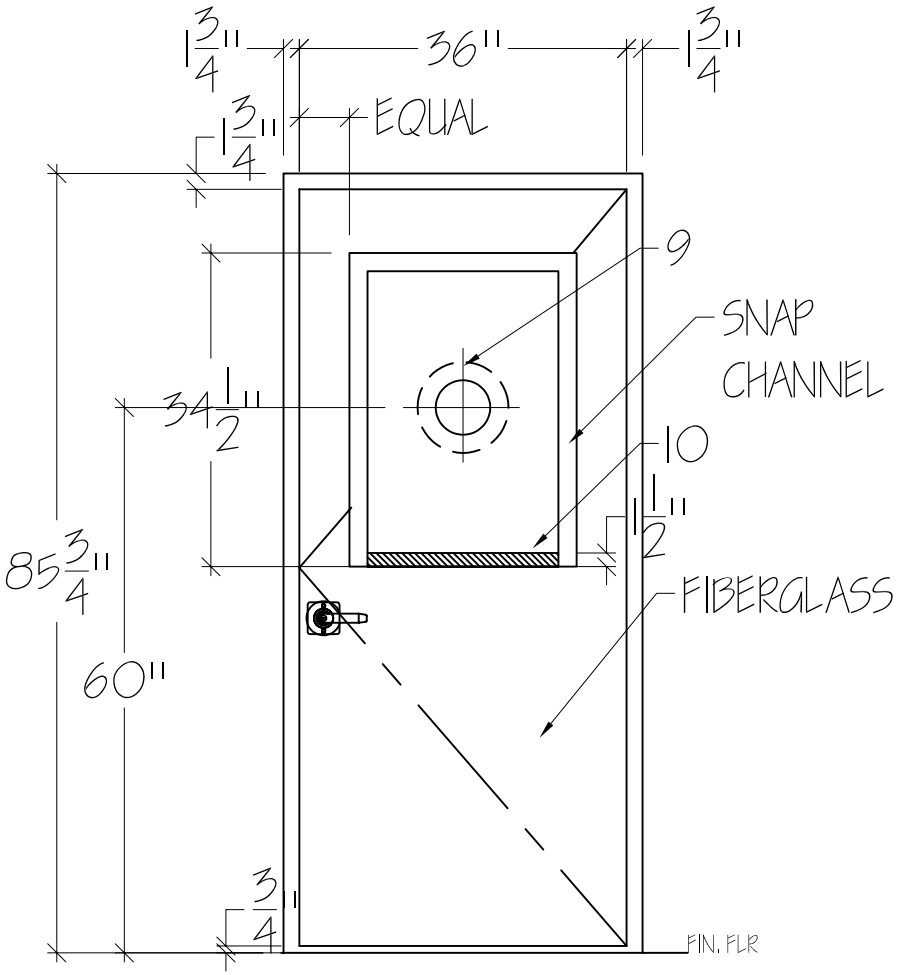

CUSTOMER APPROVAL: _____ CUSTOMER SIGNATURE _____ DATE

MANAGER APPROVAL: _____ PACIFIC BULLETPROOF SIGNATURE

PACIFIC BULLETPROOF Co.
Specializing in Ballistic Products & Systems
4035 Leaverton Court, Anaheim, Ca. 92807
www.pacificbulletproof.com Tel. (714)630-5447 Fax (714)630-5314

Project Name:	Revision:		Drawn By: TC	Sheet No.	
	Revision:		Scale: NTS	PW	
BULLET RESISTANT PANEL INSTALLATION	Revision:		Date: 08/29/06		

NOT TO BE DISTRIBUTED OR COPIED WITHOUT PRIOR CONCENT OF PACIFIC BULLETPROOF

NOT TO BE DISTRIBUTED OR COPIED WITHOUT PRIOR CONCENT OF PACIFIC BULLETPROOF

NOT TO BE DISTRIBUTED OR COPIED WITHOUT PRIOR CONCENT OF PACIFIC BULLETPROOF